Have You **Registered** *Your* **Warranty**

Installation and Operating Manual

ECO DESIGN

The **Stock Cube Series**
Popty **Ciwb/Cube Series**
Penguin **7 Series**
The **Seventy Ate "78" Series**

www.chillipenguin.co.uk

CSP 9768 10/2026

Your stove should arrive with...

- A pair of heat resistant gloves
- Air control tool
- This instruction manual
- An aerosol of spray paint - coloured stoves only
- A warm fuzzy feeling indicating that you are now part of the penguin family

Contents

Your stove should arrive with

Contents

P. 01 *Section* 1

Introduction

Description

Simple guide to your first fire

Read before first fire

The Charter of the Penguin

P. 06 *Section* 2
The plans & technical details

P. 22 *Section* 3
Installation instructions

a) Warning
b) Health and Safety Precautions
c) Smoke Control Areas and Exemption of Appliances
d) Hearth
e) Floors
f) Clearance to Combustible Walls
g) Clearance to Non Combustible Walls
h) CO Alarms
i) Flue Dampers
j) Heat Shielding
k) Ventilation
l) Plinth Clamp
m) Rear Fluing
n) Direct Air Kit (Non room- sealed only)
o) The Flue Pipe (single wall)
p) Chimney and Access for Sweeping

P. 34 *Section* 4
Instructions for use

a) Diagram of the Outside of the Stove
b) Diagram of the Inside of the Stove
c) Warnings and Pre-lighting Checks
d) Simple Guide to your First Fire
e) Instructions for burning wood
f) Principles of Combustion
g) Cooking on a Penguin

P. 44 *Section* 5
Maintenance

a) Routine Checks and Cleaning
b) Painting your Stove or Stove Pipe
c) Keeping your Stove Glass Clear
d) Door Seal
e) Door Glass Replacement
f) Removing the Throat Brick on the Stock Cube Series & Penguin 7 Series
g) Removing the Throat Brick on the Popty Ciwb/Cube Series & The Seventy Ate "78" Series
h) Vermiculite Bricks
i) Trouble Shooting

P. 53 *Section* 6
Energy efficiency & Warranty

a) Energy Efficiency Labels
b) Warranty
c) Disposal / Recycling
d) Commissioning, Stove and Installation Details

Introduction

Thank you for purchasing a Chilli Penguin Stove. You have purchased a high quality eco design stove that has been built to last. It has been designed and manufactured in the UK with a cleanburn system to ensure a clean and efficient performance.

We are proud to be a UK manufacturer. We are proud that our products heat and cook on wood - one of our most valuable renewable resources. As a company we are committed to putting sustainability first in all the decisions we make.

We put a lot of time and energy into developing and improving our stoves to enable them to run as efficiently as possible and be simple to use. Please spend a few minutes familiarising yourself with this manual, so you can get the best possible performance out your stove.

We love to hear how the penguins get on in their new homes, if you have any comments or questions, please get in touch or share a picture on social media.

If you have a quiet moment and want to make a penguin very happy, our penguins love good reviews - we have a review area on our website, we would love to hear your comments:

www.chillipenguin.co.uk/reviews

Description

This manual is for the following eco design stove.

The Stock Cube Series			
Model	The Stock Cube	Stock Cube Convector	The Fubsy
Output	4.8kW	4.8kW	4.8kW
Fuel Type	Wood only	Wood only	Wood only

Popty Ciwb/Cube Series			
Model	Popty Ciwb	Popty Stout	Popty Lofty
Output	5kW	5kW	5kW
Fuel Type	Wood only	Wood only	Wood only

Penguin 7 Series			
Model	Penguin 7	Penguin 7 Convector	Penguin Idris
Output	7.1kW	7.1kW	7.1kW
Fuel Type	Wood only	Wood only	Wood only

The Seventy Ate “78” Series		
Model	The Seventy Ate “78”	The Seventy Ate “78” Shorty
Output	7.2kW	7.2kW
Fuel Type	Wood only	Wood only

Spares are available through your local Chilli stockist or our online shop. There are diagrams online to help you identify the correct parts and advice about how to fit: www.chillipenguin.co.uk/FAQ/looking-after-your-penguin

Simple guide to your first fire

We recommend the goldilocks and the 3 bears method: small fire, medium fire, hot fire. This can be done in one session, rather than three separate fires.

Read this manual and all warnings carefully

The A, B & C of lighting your 1st stove fire are:
A = air control | B = burn dry wood | C = cure paint carefully

Teepee method 🔥 Prepare a small kindling fire

- place one or two firelighters in the centre, kindling over the top, light the fire, close the stove door
- open air control fully
- ventilate room
- maintain this SMALL FIRE for 15 minutes
- this warms up the stove components gently to prevent the paint from being "shocked"

Teepee method 🔥🔥 Medium fire

- add a few split logs
- maintain medium fire for one hour
- close air control by approx. 10mm when burning well
- aim to raise the surface temp to 450°F/230°C

Teepee method 🔥🔥🔥 Hot fire

- add additional wood
- adjust control to allow additional air flow to achieve a hot fire
- aim to achieve 600°F/315°C
- maintain hot fire for one hour

Top down method - an alternative method

Criss cross two or three layers of split logs on top each other, then one or two layers of kindling on top and insert a firelighter. Light the firelighter and close the stove door. Pull the air control knob out, then adjust to suit, once the fire is established.

Important - read before first fire

To Set / Cure the Paint

The painted surface must be cured or set properly during your first fire.

Use dry cleaning methods only for the stove surface - no liquid, even water.

We use a high temperature stove paint on all of our stoves. It is extremely important that the paint is cured properly **the first time that you light the stove**. This is done to ensure the paint finish will be able to withstand the high temperatures needed. Curing is achieved by following the three step process on the facing page. If this process is not completed properly you may experience issues with the paint. Be aware that curing will cause a very slight colour change, the hotter areas will change colour the soonest, pay extra attention to the curing of lighter colours.

We want your penguin to be perfect, so give it the attention it deserves!

Once this initial process has been completed, the paint will be properly cured and you can operate your stove normally according to the instructions provided in this manual. *If any problems arise with the painted surface of the stove, this is a result of incorrect curing or misuse of the stove such as over fuelling or running the stove too hot. Therefore any problems with the painted surface are not covered by your warranty.*

This penguin is a living, breathing, hard working appliance. Expect to touch up the painted surface occasionally over its lifetime.

Note: *During the final higher temperature burn phase there may be some visible smoke near the stove surface. There may also be an unpleasant odour. To mitigate this effect, ventilate the room with open windows and doors to provide airflow.*

Health warning: The smoke from the curing process displaces oxygen. Small children, the elderly and people with existing breathing problems should vacate the area during the hot burn to avoid discomfort. The smoke is primarily Carbon Dioxide, it is non-toxic but can feel uncomfortable.

You've bought an amazing stove, let it be amazing

The charter of the penguin

We guarantee that your stove is good quality and well made

We guarantee that your stove will give you years of warm and efficient heating

We know this because we design and make them ourselves here in Wales

We feel that stoves make the autumn crackle and the winter glow

We hope that your stove will make the bad days bearable and the good days great

We think that human beings with stoves are happier than those without

We believe that your life has just got better

Section **2**

The plans & technical details

Page **06-21**

2. The Plans (The Stock Cube Series)

The Stock Cube (Y Ciwb Stoc)

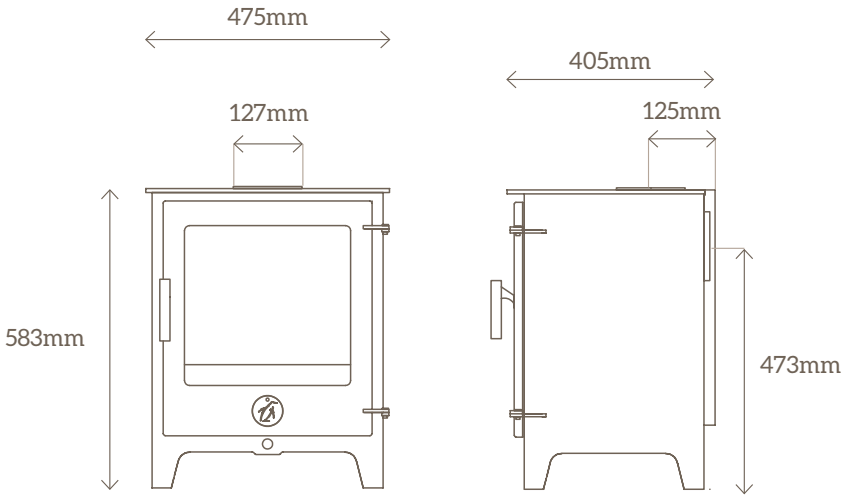

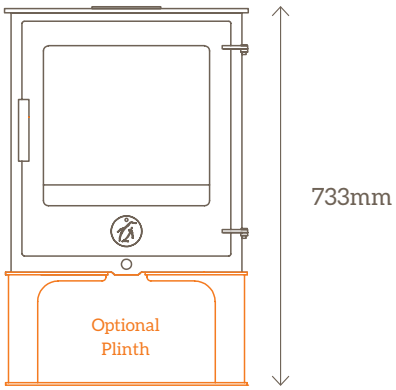

2. The Plans (The Stock Cube Series)

Stock Cube Convector (Ciwb Stoc Darfudol)

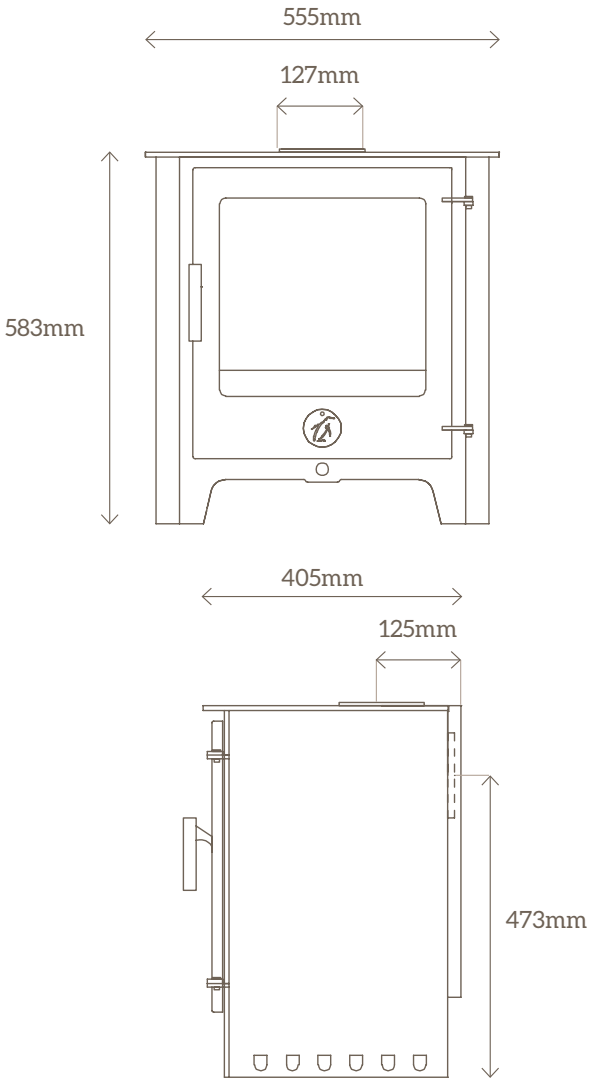

2. The Plans (The Stock Cube Series)

The Fubsy

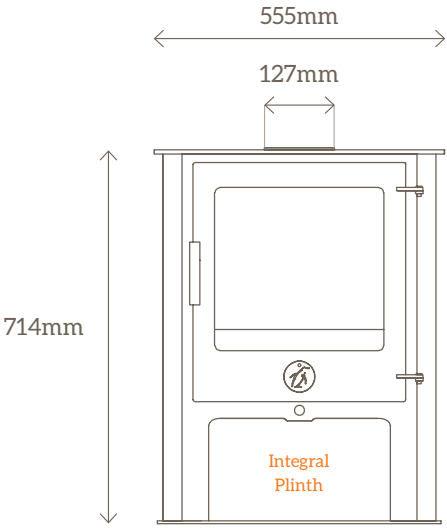

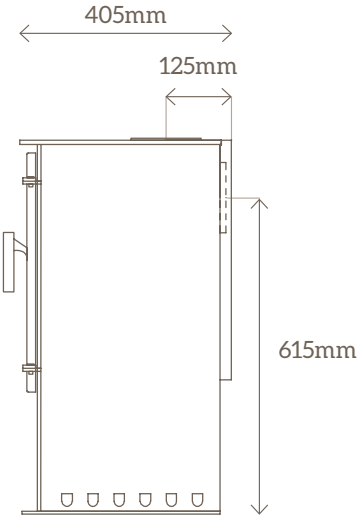

2. The Tech Details

The Stock Cube Series

WOOD ONLY	
Nominal Output	4.8kW
Total Energy Efficiency % (wood)	**76.9%**
CO Content @13% O_2 (wood)	**0.12%**
NOx mg/m³	**114mg/m³**
Cx Hy mg/m³	**116mg/m³**
Energy Rating / Energy Index	**A / 102**
Smoke Particulates @ 13% O_2	**27mg/m³**
Flue Gas g/s (wood)	5.3g/s
Mean Flue Gas Temp. °C (wood)	243°C
Approved For Use In Smoke Control Zones	Yes
Seasonal Efficiency	66.9%
Max. Log Length x Average Diameter	300mm x 100mm
Max. Fuel Load	2.5kg
Flue Collar Diameter	127mm / 5”
Flue Size Required	Ideal 152mm / 6” - Min. 127 mm / 5”
Top Exit	Standard
Rear Exit	Fit blanking plate to top exit
Hearth Type	Min. 12mm
Hearth Type with Plinth	Min. 12mm
Chimney Draught Required	12Pa
Construction	Welded steel
Weight	Stock Cube = 85kg / Stock Cube Convector = 95Kg / The Fubsy = 101Kg

Tested to EN 13240:2001 / EN 13240-A2:2004 / BS 3841-2:1994

For distances to combustibles / non-combustibles see section 3

2. The Plans (Popty Ciwb/Cube Series)

Popty Ciwb

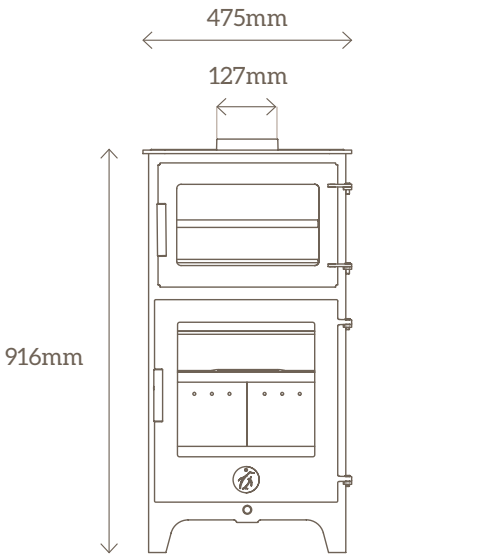

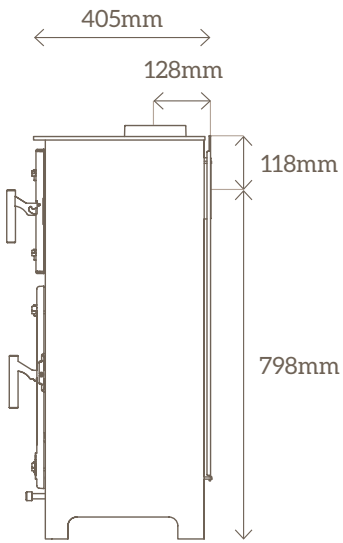

2. The Plans (Popty Ciwb/Cube Series)

Popty Stout

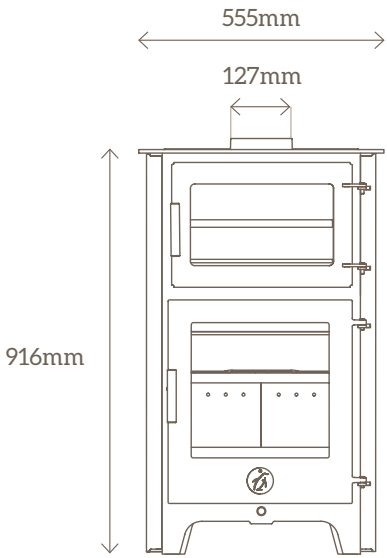

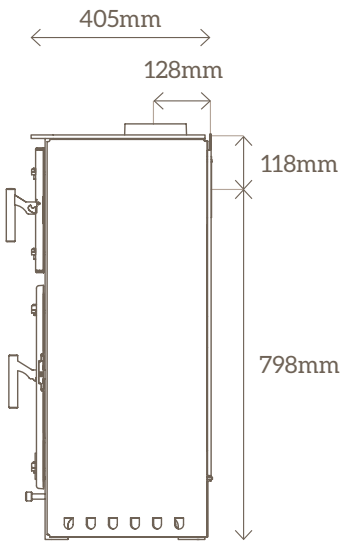

2. The Plans (Popty Ciwb/Cube Series)

Popty Lofty

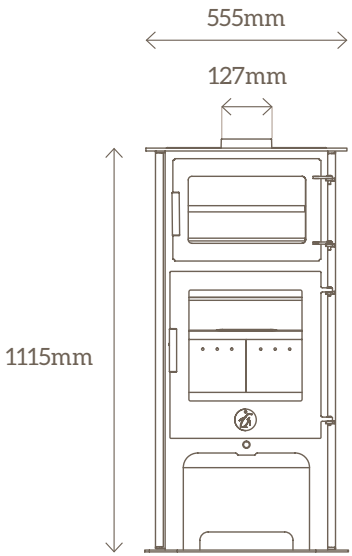

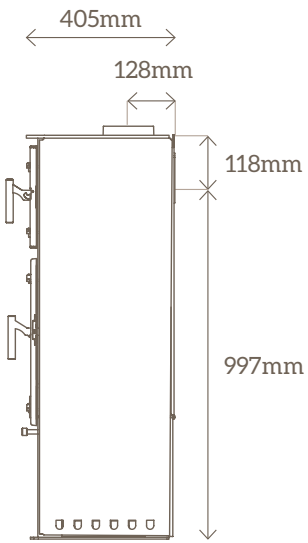

2. The Tech Details
Popty Ciwb/Cube Series

WOOD ONLY	
Nominal Output	5kW
Total Energy Efficiency % (wood)	**82.4%**
CO Content @13% O_2 (wood)	**0.11%**
NOx mg/m³	**108mg/m³**
Cx Hy mg/m³	**77mg/m³**
Energy Rating / Energy Index	**A+/121**
Smoke Particulates @ 13% O_2	**35mg/m³**
Flue Gas g/s (wood)	5.4g/s
Mean Flue Gas Temp. °C (wood)	194°C
Approved For Use In Smoke Control Zones	Yes
Seasonal Efficiency	72.4%
Max. Log Length x Average Diameter	300mm x 100mm
Max. Fuel Load	2.5kg
Flue Collar Diameter	127mm / 5”
Flue Size Required	Ideal 152mm / 6” - Min. 127 mm / 5”
Top Exit	Standard
Rear Exit	Fit blanking plate to top exit
Hearth Type	Min. 12mm
Hearth Type with Plinth	Min. 12mm
Chimney Draught Required	12Pa
Construction	Welded steel
Weight	Popty Ciwb = 125kg / Popty Stout = 136Kg / Popty Lofty = 141Kg

Tested to EN 13240:2001 / EN 13240-A2:2004 / BS 3841-2:1994

For distances to combustibles / non-combustibles see section 3

2. The Plans (Penguin 7 Series)

Penguin 7 (Pengwin 7)

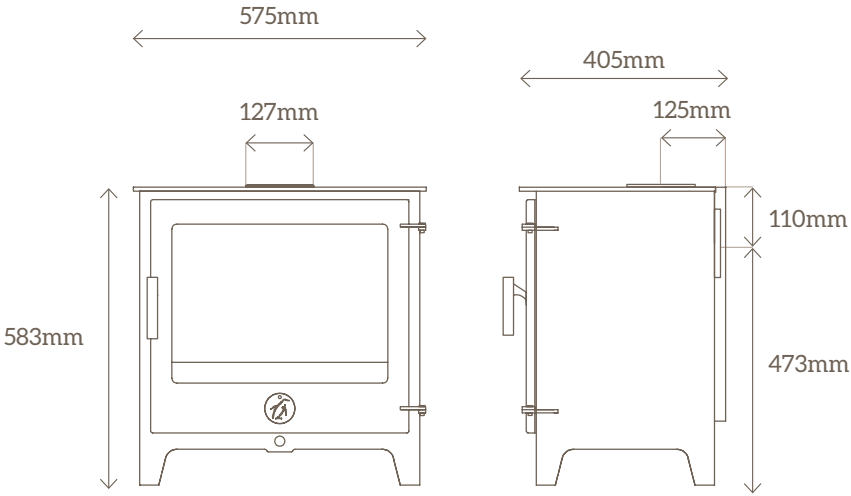

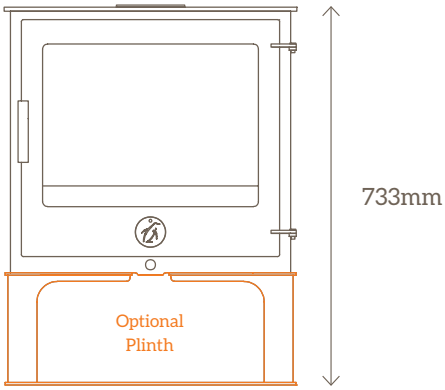

2. The Plans (Penguin 7 Series)

Penguin 7 Convector (Pengwin 7 Darfudol)

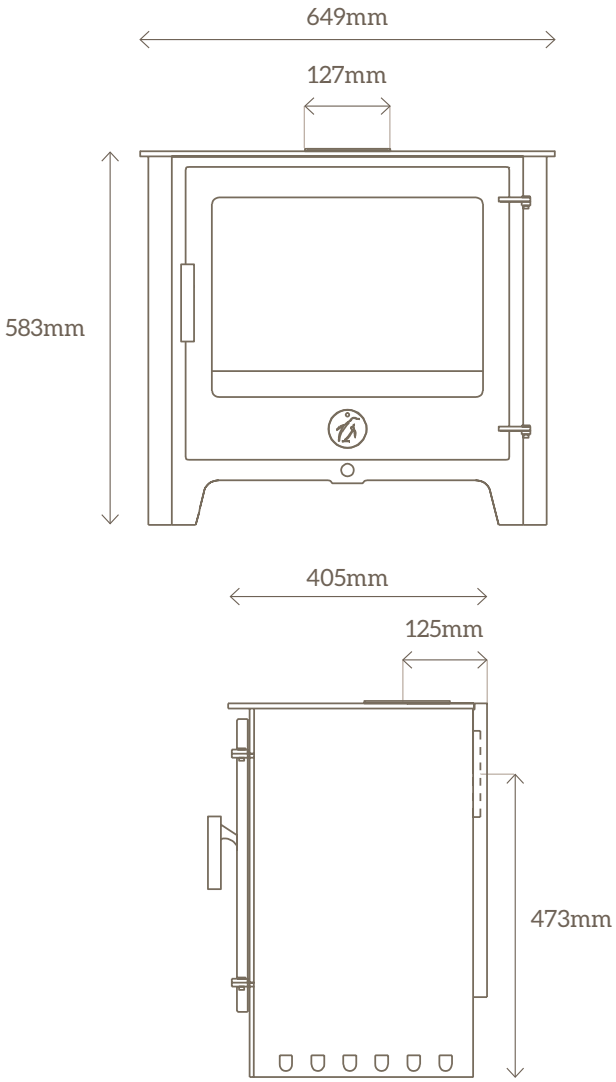

2. The Plans (Penguin 7 Series)

Penguin Idris (Pengwin Idris)

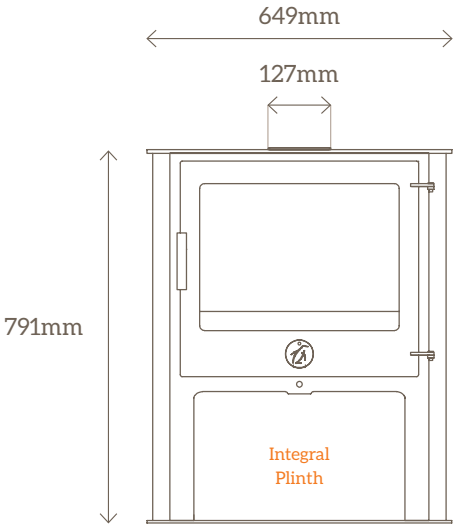

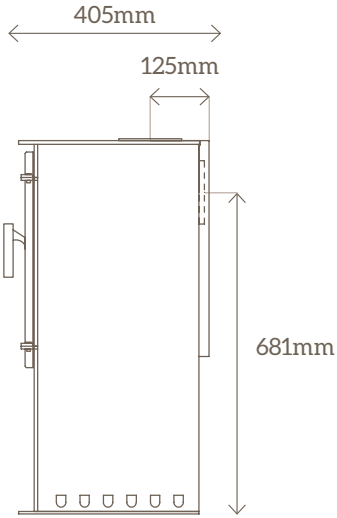

2. The Tech Details

Penguin 7 Series

WOOD ONLY	
Nominal Output	7.1kW
Total Energy Efficiency % (wood)	**75.8%**
CO Content @13% O_2 (wood)	**0.11%**
NOx mg/m³	**98mg/m³**
Cx Hy mg/m³	**101mg/m³**
Energy Rating / Energy Index	**A / 100**
Smoke Particulates @ 13% O_2	**25mg/m³**
Flue Gas g/s (wood)	7.0g/s
Mean Flue Gas Temp. °C (wood)	284°C
Approved For Use In Smoke Control Zones	Yes
Seasonal Efficiency	65.8%
Max. Log Length x Average Diameter	450mm x 100mm
Max. Fuel Load	3.5kg
Flue Collar Diameter	127mm / 5”
Flue Size Required	Ideal 152mm / 6” - Min. 127 mm / 5”
Top Exit	Standard
Rear Exit	Fit blanking plate to top exit
Hearth Type	Min. 12mm
Hearth Type with Plinth	Min. 12mm
Chimney Draught Required	12Pa
Construction	Welded steel
Weight	Penguin 7 = 111kg / Penguin 7 Convector = 121Kg / Penguin Idris = 127Kg

Tested to EN 13240:2001 / EN 13240-A2:2004 / BS 3841-2:1994

For distances to combustibles / non-combustibles see section 3

2. The Plans (The Seventy Ate "78" Series)

The Seventy Ate "78" (Pengwin 78)

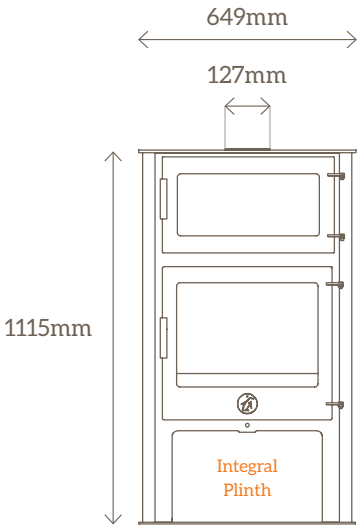

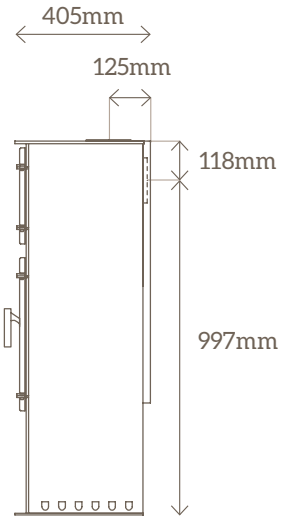

2. The Plans (The Seventy Ate "78" Series)

The Seventy Ate "78" Shorty (Pengwin 78 Bach)

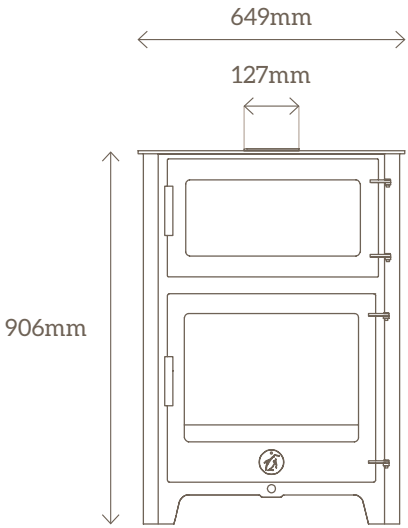

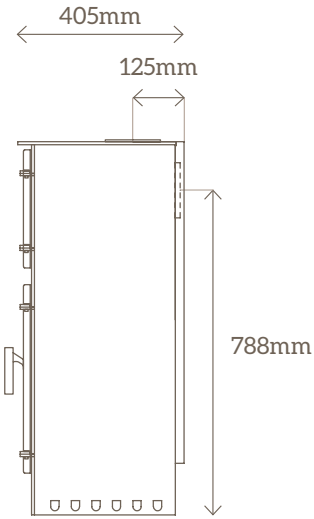

2. The Tech Details

The Seventy Ate "78" Series

UK CA

WOOD ONLY	
Nominal Output	7.2kW
Total Energy Efficiency % (wood)	**75.4%**
CO Content @13% O_2 (wood)	**0.11%**
NOx mg/m³	**116mg/m³**
Cx Hy mg/m³	**82mg/m³**
Energy Rating / Energy Index	**A / 100**
Smoke Particulates @ 13% O_2	**40mg/m³**
Flue Gas g/s (wood)	9.9g/s
Mean Flue Gas Temp. °C (wood)	211°C
Approved For Use In Smoke Control Zones	Yes
Seasonal Efficiency	65.4%
Max. Log Length x Average Diameter	450mm x 100mm
Max. Fuel Load	3.5kg
Flue Collar Diameter	127mm / 5"
Flue Size Required	Ideal 152mm / 6" - Min. 127 mm / 5"
Top Exit	Standard
Rear Exit	Fit blanking plate to top exit
Hearth Type	Min. 12mm
Hearth Type with Plinth	Min. 12mm
Chimney Draught Required	12Pa
Construction	Welded steel
Weight	The Seventy Ate "78" = 191kg / The Seventy Ate "78" Shorty = 171Kg

Tested to EN 13240:2001 / EN 13240-A2:2004 / BS 3841-2:1994

For distances to combustibles / non-combustibles see section 3

Section **3**

Installation instructions

Page **22-33**

3. Installation Instructions

3.a Warning

All local and national regulations must be observed when installing the appliance. If installed incorrectly serious accidents can be caused.

Building Regulation Document J must be referred to when installing this appliance.

It is the installer's responsibility to ensure the manufacturer's instructions are complied with. A HETAS qualified installation engineer should carry out the installation and issue a compliance certificate. In addition, they should complete the commissioning checklist at the back of this manual. If a HETAS installer is not installing your stove your local Building Control department needs to inspect the installation and register the work carried out.

3.b Health and Safety Precautions

Special care should be taken when installing a stove so that the requirements of the Health and Safety at Work Act are met, with particular attention to the following.

Lifting and handling: adequate facilities must be available for loading, unloading and handling

Fire cement: some types of fire cement are caustic and should not come into contact with the skin. In case of contact, wash immediately with plenty of water

Asbestos: our stoves do not contain asbestos. If there is any possibility of disturbing asbestos in the course of installation, please seek specialist guidance and use appropriate protective equipment

Metal parts: when installing/servicing this stove take care to avoid the possibility of personal injury

A SAFE PENGUIN

IS A HAPPY PENGUIN

3.c Smoke Control Areas and Exemption of Appliances

The Chilli Penguin Stock Cube Series, The Popty Ciwb/Cube Series, The Penguin 7 Series and The Seventy Ate "78" Series are exempt stoves which means you can use them in smoke control areas to burn seasonal wood.

If you live in a smoke control area (introduced by The Clean Air Act, 1993, see below) you are permitted to burn approved smokeless fuel only, this does not include wood. However if you use an Exempt stove then you can burn seasoned wood. All of these stoves are wood only.

These appliances are not exempted when burning wood briquettes or paper bricks or unauthorised fuels.

The general principle to be observed in an Exempt chilli penguin stove is that the air control cannot be completely closed, allowing a permanent air supply to the fire chamber. This means that fuel burns more efficiently, thereby emitting less harmful emissions into the atmosphere. This adaptation is factory fitted in these stoves.

The Chilli Penguin Ecodesign stoves in this manual are fitted with a permanent stop preventing closure of the air control for DEFRA exemption.

"The Clean Air Act 1993 and Smoke Control Areas"

Under the Clean Air Act local authorities may declare the whole or part of the district of the authority to be a smoke control area. It is an offence to emit smoke from a chimney of a building, from a furnace or from any fixed boiler if located in a designated smoke control area. It is also an offence to acquire an "unauthorised fuel" for use within a smoke control area unless it is used in an "exempt" appliance ("exempted" from the controls which generally apply in the smoke control area).

The Secretary of State for Environment, Food and Rural Affairs has powers under the Act to authorise smokeless fuels or exempt appliances for use in smoke control areas in England. In Scotland and Wales this power rests with Ministers in the devolved administrations for those countries. Separate legislation, the Clean Air (Northern Ireland) Order 1981, applies in Northern Ireland. Therefore it is a requirement that fuels burnt or obtained for use in smoke control areas have been "authorised" in Regulations and that appliances used to burn solid fuel in those areas (other than "authorised" fuels) have been exempted by an Order made and signed by the Secretary of State or Minister in the devolved administrations.

Further information on the requirements of the Clean Air Act can be found here: www.gov.uk/smoke-control-area-rules

Your local authority is responsible for implementing the Clean Air Act 1993 including designation and supervision of smoke control areas and you can contact them for details of Clean Air Act requirements.

3.d Hearth

A hearth is made up of 2 layers: a constructional hearth (base concrete layer) and a superimposed hearth (top decorative layer). The Stock Cube Series, The Popty Ciwb/ Cube Series, The Penguin 7 Series and The Seventy Ate "78" Series do not require a constructional hearth, a superimposed hearth is adequate.

The Stock Cube Series & The Popty Ciwb/Cube Series	
The Stock Cube Stock Cube Convector The Fubsy Popty Ciwb Popty Stout Popty Lofty	Superimposed 12mm (minimum)

Penguin 7 Series & The Seventy Ate "78" Series	
Penguin 7 Penguin 7 Convector Penguin Idris The Seventy Ate "78" The Seventy Ate "78" Shorty	Superimposed 12mm (minimum)

In front of the stove	225mm (minimum)

Both sides of the stove	150mm (minimum)

All freestanding stoves require a superimposed hearth of at least 850x850mm square (in addition to any constructional hearth requirements)

NB. Do not place soft furnishings within 1150mm of the stove

LIFE IS BETTER...

BY THE FIRE

DIAGRAM OF HEARTH

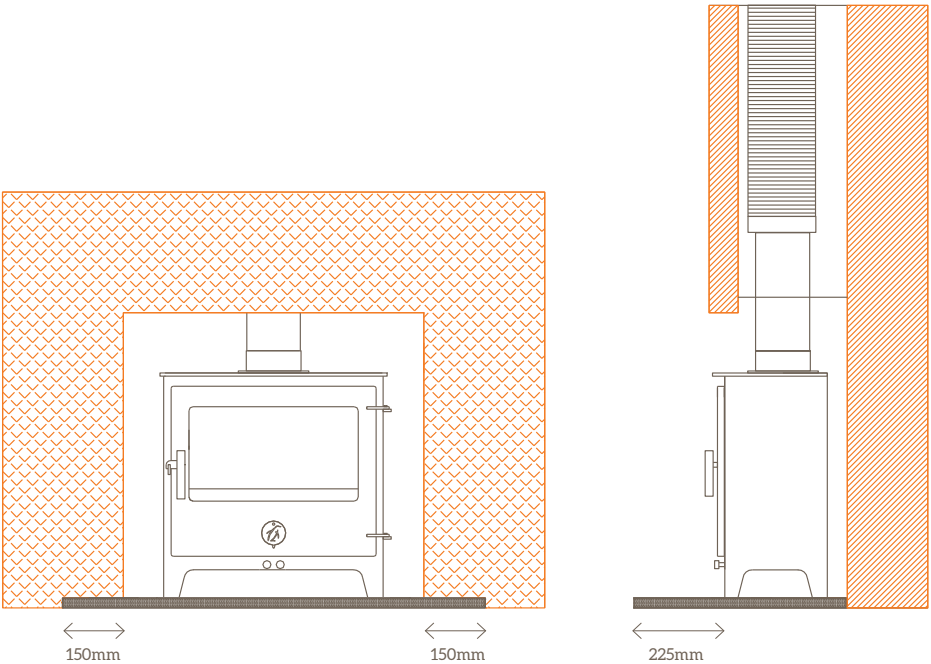

Minimum distance from stove to edge of superimposed hearth

3.e Floors

Make sure the floor can take the weight of the stove, the flue, the hearth and any decorative surround.

Spares are available through your local Chilli stockist or our online shop. There are diagrams online to help you identify the correct parts and advice about how to fit: www.chillipenguin.co.uk/FAQ/looking-after-your-penguin

3.f Combustible Walls

Diagrams illustrating the minimum distances to *combustible walls i.e wood/plasterboard

*Combustible = able to catch fire and burn easily

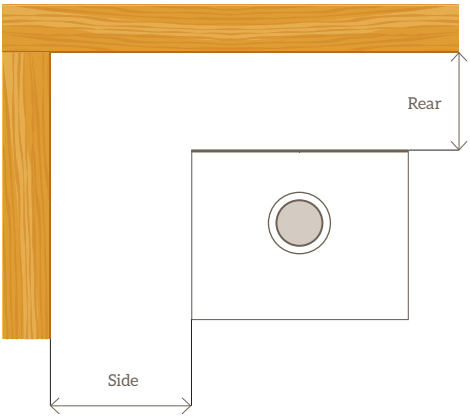

MINIMUM DISTANCES TO COMBUSTIBLE WALLS

Model	Rear	Both Sides	Above
The Stock Cube The Stock Cube with insulated pipe	400mm 150mm	500mm 500mm	500mm 500mm
Stock Cube Convector & Fubsy Stock Cube Convector & Fubsy with insulated pipe	350mm 150mm	300mm 300mm	500mm 500mm
Popty Ciwb Popty Ciwb with insulated pipe	300mm 100mm	400mm 400mm	500mm 500mm
Popty Stout & Lofty Popty Stout & Lofty with insulated pipe	300mm 100mm	200mm 200mm	500mm 500mm
Penguin 7 Penguin 7 with insulated pipe	300mm 100mm	400mm 400mm	550mm 550mm
Penguin 7 Convector Penguin 7 Convector with insulated pipe	300mm 100mm	300mm 300mm	550mm 550mm
Penguin Idris Penguin Idris with insulated pipe	300mm 100mm	300mm 300mm	550mm 550mm
The Seventy Ate “78” & “78” Shorty The Seventy Ate “78” & “78” Shorty with insulated pipe	*300mm *300mm	300mm 300mm	550mm 550mm

*Currently under testing to reduce this distance, ask your stockist

Rear distances to combustibles using a non-insulated flue pipe include safe distances required by building regulations. See heat shielding section if reduced distances are required.

GIVE ME A LITTLE PLACE...

3.g Clearance to Non Combustible Walls

Diagram illustrating the minimum distances to non *combustible surfaces i.e stone/brick

*Non Combustible = made of material that does not burn if exposed to fire

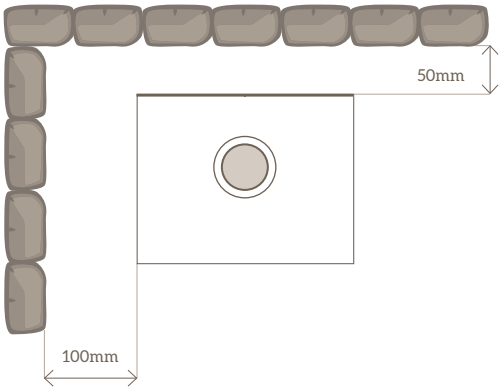

MINIMUM DISTANCES TO NON COMBUSTIBLE WALLS

Model	Rear	Sides	Above
The Stock Cube Stock Cube Convector The Fubsy Popty Ciwb Popty Stout Popty Lofty	50mm	100mm	150mm
Penguin 7 Penguin 7 Convector Penguin Idris	50mm	100mm	150mm
The Seventy Ate “78” The Seventy Ate “78” Shorty	50mm	100mm	150mm
• Rear wall thickness needs to be at least 200mm thick. • These are minimum distances.			

NB. Flue pipe safe distances can be greater than the appliance, depending on type

3.h CO Alarms

Building regulations require that when a new or replacement fixed solid fuel or wood/ biomass appliance is installed in a dwelling a carbon monoxide alarm must be fitted in the same room as the appliance. Further guidance on the installation of the carbon monoxide alarm is available in BS EN 50292:2002 and from the alarm manufacturer's instructions.

Provision of an alarm must not be considered a substitute for either installing the appliance correctly or ensuring regular servicing and maintenance of the appliance and chimney system.

3.i Flue Dampers

We recommend that dampers are not used with our stoves.

3.j Heat Shielding

FREE STANDING STOVES, 5kW

It is possible to reduce the distances to combustibles with an appropriate heat shield, (British Standard 8303).

We manufacture several sizes of wall mounted heat shield made from 1.5 mm steel which maintains a 40 mm air gap. (This is greater than the minimum distance required by BS8303). They have an open top and bottom to allow for a flow of cool air between the heat shield and combustible material. Be aware that you are heat shielding both the stove and flue collar.

Distances to combustibles, square into corner & flat wall installation 5kW
The distances to combustibles can be reduced to a minimum of 95 mm from the rear of the stove to the front of the heat shield, when installed square into a corner. This applies to free standing installations on a flat wall as well, (see diagram on facing page).

Distances to combustibles, diagonal corner installation 5kW
If the stove is installed at an angle of 45 degrees to the wall, then the distance can be reduced to a minimum of 65 mm from the nearest point of the stove to the front face of the heat shield, (see diagram on facing page).

SQUARE INTO CORNER 5kW

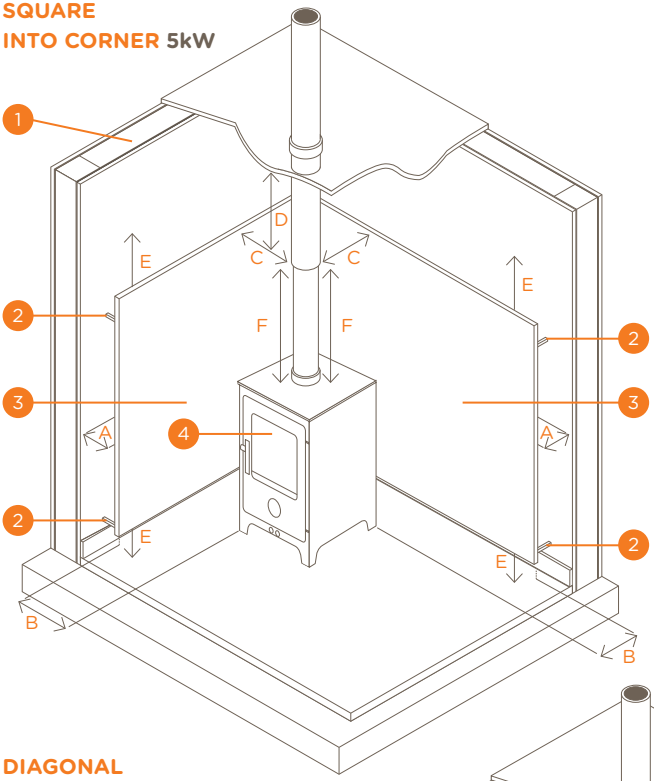

Number Key

1 Combustible wooden stud wall
2 Fixing
3 Sheet metal shield
4 Stove

Letter Key

A Air gap behind shield min. 25mm
B Distance to closest point of appliance min. 95mm
C Distance from connecting flue pipe to metal shield: 1.5 x diameter of the flue pipe
D Distance from start of chimney to ceiling min. 425mm
E Air gap open at top and bottom: min. 25mm from hearth to bottom of shield
F Distance from top of stove to the top of the heat shield: min. 300mm

(diagram adapted from Hetas bulletin 13 ref BS8303)

DIAGONAL INTO CORNER 5kW

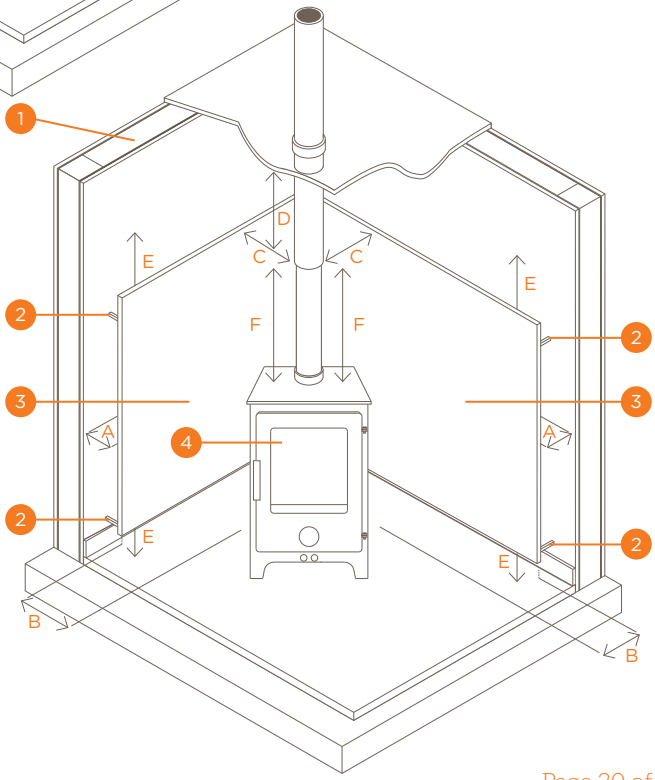

Number Key

1 Combustible wooden stud wall
2 Fixing
3 Sheet metal shield
4 Stove

Letter Key

A Air gap behind shield min. 25mm
B Distance to closest point of appliance min. 65mm
C Distance from connecting flue pipe to metal shield: 1.5 x diameter of the flue pipe
D Distance from start of chimney to ceiling min. 425mm
E Air gap open at top and bottom: min. 25mm from hearth to bottom of shield
F Distance from top of stove to the top of the heat shield: min. 300mm

(diagram adapted from Hetas bulletin 13 ref BS8303)

3.k Ventilation

It is essential that the fire has adequate air supply for combustion and ventilation. Apertures provided for this purpose shall not be restricted. For stoves of 5kW and under like the Stock Cube Series and the Popty Ciwb/Cube Series a permanently open air vent may sometimes be required. For the Penguin 7 Series and The Seventy Ate "78" Series a vent will always be required. In new build houses air vents are required for **all** sizes of stoves, this can apply to new extensions as well. This will depend on the air leakage (air permeability) of your property. Your HETAS installer should be able to guide you on your particular property. Permanent ventilation must be fitted in accordance with the guidelines given in Approved Document J of The Building Regulations.

If a stove is to be fitted in a room with an appliance such as an extractor fan, tumble drier or ceiling fan, it will affect the draw of the flue system and could lead to fumes entering the room. Additional room ventilation may be required, a flue draught test under worst case scenario must be carried out by a qualified installer. In the case of an extractor fan, often the simplest solution is to convert it to carbon filter extractor. Air vents should be positioned so that they are not liable to blockage.

3.l Plinth Clamp

If you order a plinth it will come with a plinth clamp. This consists of two flat bars. It is designed to clamp the stove and the plinth together securely.

Position of Plinth clamps

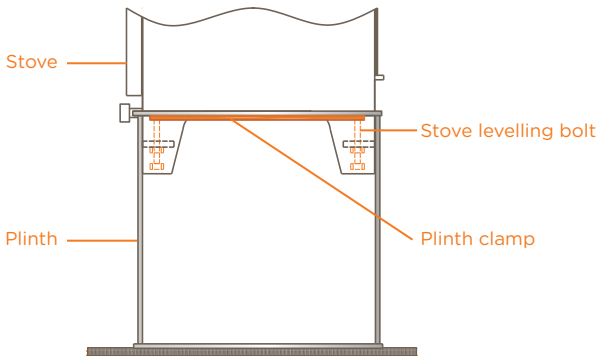

To fit: Place the bars inside the plinth, one on the left side and one on the right, running front to back. Use levelling bolts to secure.

3.m Rear Fluing

The usual route for a flue is out of the collar on top of the stove. However the way some chimneys and fireplaces are set up, fluing out of the rear can be a better option.

Rear Flue Table	
Non-oven Models	**Stock Cube Series & Stock Cube Series**
Option 1	Special order a “flat top” at point of order
Option 2*	• Swap blanking disc at rear to the inside of the top outlet • Cut out blanks in the rear heat shield ready for rear connection (optional decorative blanking disc available)
Oven Models	**Popty Ciwb/Cube Series & The Seventy Ate “78” Series**
Option 1	“Flat top” not available for oven models
Option 2*	• Swap blanking disc and top collar • Cut out blanks in the rear heat shield ready for rear connection

* These changes can be made during manufacture if pre-ordered as “rear flue ready”

3.n Direct Air Kit (non-room sealed only)

All our models have the option of a factory fitted direct air kit. There are a large number of criteria that need to be assessed prior to fitting and commissioning. Please refer to the HETAS Guidelines and Commissions Procedure (HETAS TN-0020).

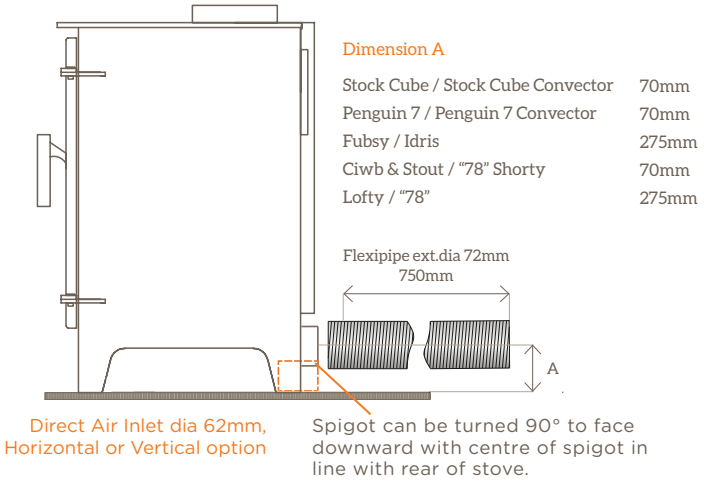

HETAS product approval only covers this appliance when installed conventionally in accordance with the manufacturer’s instructions and current relevant standards and guidance. When installed using ducted combustion air supply, (direct air kit) responsibility for the correct operation of the appliance and for appropriate manufacturer’s instructions is carried by the appliance manufacturer, as allowed for under the Building Regulations.

3.o The Flue Pipe (single wall)

Single walled flue pipe must be at least **3 times its diameter** away from any combustibles eg. a timber beam. This may be reduced if adequate protection is provided to prevent heat transfer **(see Heat Shielding, section 3)**. N.B be aware that it is possible, particularly in older properties for timber beams to enter the inside of the chimney cavity so it must be inspected.

3.p Chimney and Access for Sweeping

Chimney / Flueway	
Must comply with all current building regulations (British Standards BS EN 15287-1:2007 design, installation and commissioning of chimneys).	
We recommend that all masonry chimneys are lined.	
Minimum Flue Height	4.5 metres
Flue Diameter	Lined with 150mm diameter class 1 liner where possible, where not, 125mm flue is permitted, due to pre fitted smoke control adaptation
A flue way must not be shared with other appliances	
A flue way must be gas tight and free of tar deposits. The chimney must be swept and examined for soundness and suitability before the stove is installed. Remedial action should be taken if required, seeking expert advice if necessary.*	
Where the chimney is believed to have previously served an open fire installation it is possible that the higher flue gas temperature from a closed appliance may loosen deposits that were previously firmly adhered, with the consequent risk of flue blockage. It is therefore recommended that the chimney be swept a second time within a month of regular use after installation.	
New chimney: A new chimney of factory made insulated flue system must comply with Building Regulations. Consult a chimney specialist for advice on suitable flue systems for solid fuel.	

Sweeping
The chimney must be swept and examined for soundness and suitability before the stove is installed **(see note above*)**
Provision must be made for sweeping access and for the removal of soot and debris.
Sweeping access for a lined chimney Remove throat brick and sweep through stove.
Sweeping access for an unlined chimney If the chimney is unlined an access panel is required in the register plate.

CHIM CHIMINEY, CHIM CHIMINEY, CHIM CHIM CHER-EE
A SWEEP IS AS LUCKY AS LUCKY CAN BE

Section 4

Instructions for use

Page 34-43

4. Instructions for use

4.a Diagram of the Outside of the Stove

Stove Components

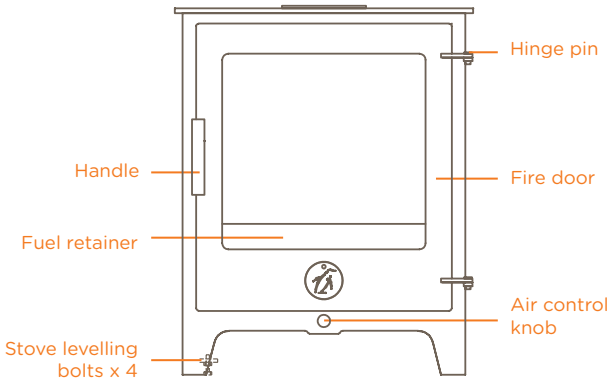

Fuel retainer: this prevents logs falling against the glass and reduces ash fallout. It also supplies boost air internally. This should be kept clear of ashy build up.

Stove levelling bolts: bolts on each leg used to level the stove during installation.

Air control knob: The stainless steel knob on the bottom centre of your stove controls the air over the top of the fire and over the door glass. It also provides additional 'boost' air when it is furthest out. When knob is closed by approx. 10mm, this closes 'boost' features.

Hinge pin: pins to hold the door to the stove body.

Flue collar: the integral 5"/127mm collar on the top of the stove. The stove is designed to burn on a 6" flue. The minimum size flue diameter that can be used is 5"/125mm, this is because there is a smoke control adaptation fitted.

Fire door: The main glass door in front of the fire.

Air control tool (diagram below): tool for operating the stove when hot, with cut outs to allow easy operation of air control knob.

4.b Diagram of the Inside of the Stove

Internal Stove Components

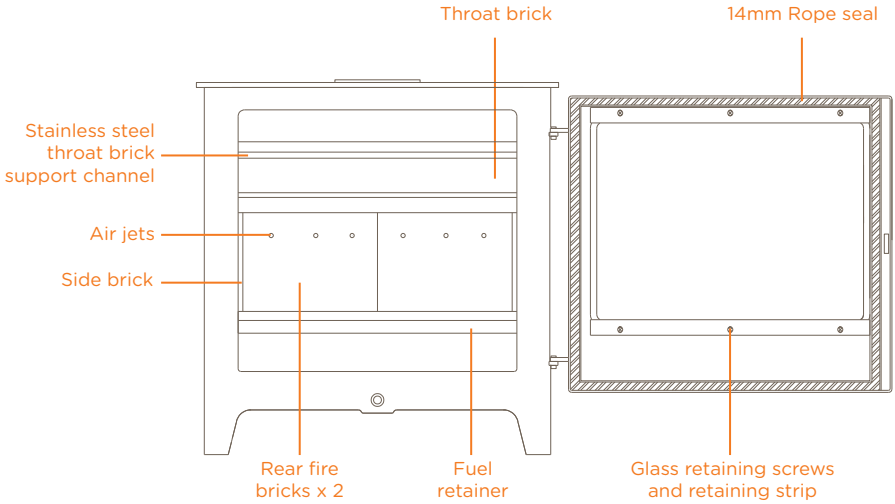

Throat brick: this forms the "roof" of the fire box.

Air jets: pre-heated combustion air is introduced into the fire box.

Side brick: vermiculite brick at each side of the stove.

Rear fire bricks: vermiculite bricks at the rear.

Base bricks: vermiculite bricks at the base of the stove (not shown).

Baffle brick: The Popty Ciwb Series and The Seventy Ate "78" Series only (not shown).

Glass retaining strips: retaining strip and screws (early Stock Cube models had clips and screws).

Rope seal: Used to form a gas tight seal around all door edges.

WARNING

IN THE PRESENCE OF CHILDREN, AND OLD AND/OR INFIRM PEOPLE.
THE FIREGUARD SHOULD BE MANUFACTURED IN ACCORDANCE WITH BS 8423:2002,
FIREGUARDS FOR USE WITH SOLID FUEL APPLIANCES.

4.c Warnings and Pre-lighting Checks

WELCOME, YOU ARE NEARLY READY TO LIGHT YOUR FIRST FIRE. PLEASE FAMILIARISE YOURSELF WITH THESE CHECKS AND WARNINGS BEFORE YOU BEGIN.

Chilli Penguin Stoves will not be responsible for any damage caused to the stove due to either the incorrect installation of the stove or the incorrect use of the stove, including the use of the wrong fuels. We strongly recommend the use of a qualified and experienced installer.

PROTECTING THE STOVE SURFACE

Your stove has been painted using a high temperature paint, this will give a long lasting and durable finish **after the paint has cured. The process of curing occurs during the first few times you light the stove**. **Follow our simple guide to your first fire so that the paint cures properly.** Care must be taken when handling the stove prior to the first firings. It is at its most vulnerable at this stage. With the lighter colours, particularly the polar colour, we recommend that you wear clean gloves from unpacking onwards. Use dry cleaning methods only i.e. soft brush or hoover (always when the stove is cold). Do not use damp cloths. If you are plastering /decorating in the same room keep the stove covered.

PAINTING FLUE OR STOVE

IF you wish to touch up your stove or paint your flue pipe to match the stove, please read **Painting your stove, section 5**. All coloured stoves will come with an aerosol of the matching colour.

FUMES

While the stove paint is curing, it will give off fumes. Please ensure that you ventilate the room, opening doors and windows as necessary.

AIR SUPPLY FOR COMBUSTION AND VENTILATION

It is important that apertures provided for ventilation and combustion air are not covered.

SMOKE EMISSIONS

Properly installed and operated the stove will not emit smoke into your home with the exception of the occcasional smoke from de-ashing and re-fuelling. Occasionally adverse weather conditions can cause a down-draught, this should be very occasional. Persistent smoke emission is dangerous and must not be tolerated. If smoke emission does persist:

• Open all doors and windows • Let the fire go out • Check flue or chimney for blockage

Do not re-light fire until cause of problem has been rectified. Seek professional help.

HOT SURFACES

The surfaces of the appliance are designed to get hot during operation. It is recommended to use a fireguard in the presence of children or vulnerable adults.

CO alarm

It is a legal requirement to install a Carbon Monoxide detector. In addition we strongly advise fitting a smoke alarm when you install a solid fuel appliance such as a stove. Take advise for position of both. (see CO Alarm, section 3)

FUEL

Only burn dry, seasoned/kiln dried wood in these wood-only stoves. DO NOT burn house coal or smokeless fuel. DO NOT treat your stove as an incinerator for general rubbish. DO NOT use any liquid fuels..

CHIMNEY FIRE

In the event of a chimney fire, close all stove doors and air vents. Evacuate the house and phone the fire service.

PRE-LIGHTING CHECKS

- Check that the door closes correctly and the rope seals and glass are intact
- Check that the throat plate brick is positioned correctly
- Check that all labels and packaging have been removed (including from the flue system)
- Check that any access points in the flue are closed off e.g. sweeping access

For your first fire you will need
Matches
Firelighter (*we recommend the wax wool type*)
Kindling (*dry sticks*)
Seasoned *or* kiln dried split logs

You light my fire

4.d Simple Guide to your First Fire

We recommend the goldilocks and the 3 bears method: small fire, medium fire, hot fire. This can be done in one session, rather than three separate fires.

READ THIS MANUAL AND ALL WARNINGS CAREFULLY

The A, B & C of lighting your 1st stove fire are:
A = air control | B = burn dry wood | C = cure paint carefully

TEEPEE METHOD PREPARE A SMALL KINDLING FIRE

- place one or two firelighters in the centre, kindling over the top, light the fire, close the stove door
- open air control fully
- ventilate room
- maintain this SMALL FIRE for 15 minutes
- this warms up the stove components gently to prevent the paint from being "shocked"

TEEPEE METHOD MEDIUM FIRE

- add a few split logs
- maintain medium fire for one hour
- close air control by approx. 10mm when burning well
- aim to raise the surface temp to 450°F/230°C

TEEPEE METHOD HOT FIRE

- add additional wood
- adjust control to allow additional air flow to achieve a hot fire
- aim to achieve 600°F/315°C
- maintain hot fire for one hour

TOP DOWN METHOD - AN ALTERNATIVE METHOD

Criss cross two or three layers of split logs on top each other, then one or two layers of kindling on top and insert a firelighter. Light the firelighter and close the stove door. Pull the air control knob out, then adjust to suit, once the fire is established.

4.e Instructions for Burning Wood

THE AIR CONTROLS

To get started and to refuel

Pull the air control knob fully out, using the glove or tool provided, this supplies both boost and normal air supplies. Boost air enters the firebox through the slot in the fuel retainer.

Once the fire is established

Close off the air boost by pushing in the air control in by approx. 10mm.

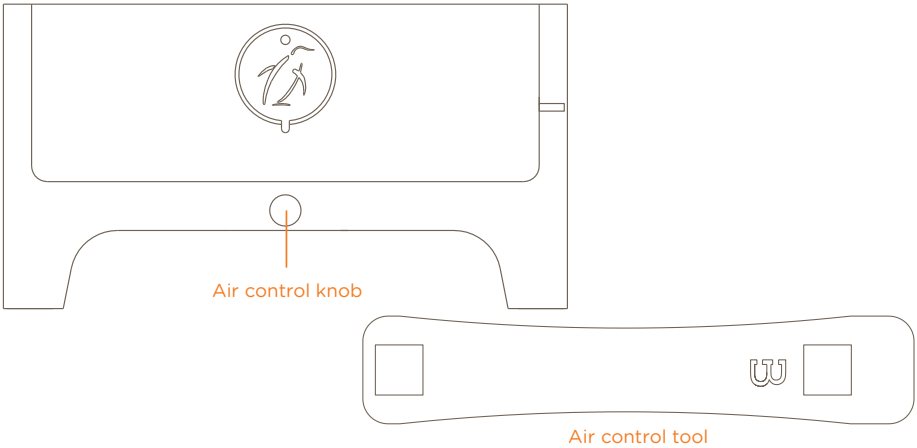

REFUELLING

Wood will burn most efficiently when burnt in complete loads – let the fire burn down to a bed of glowing embers before refuelling the fire box with new logs. Open the control fully again to get the new fuel burning – once alight re-adjust contols to the desired position. Do not block the boost vent in the fuel retainer with the new logs or excess ash.

WARNINGS

Refuelling on to a low fire bed (not much fuel glowing)

If there is insufficient burning material in the fire bed to light a new load of fuel, excessive smoke emission can occur. Refuelling must be carried out onto a sufficient quantity of glowing embers so that the new fuel load will ignite in a reasonable period. If there are too few embers in the fire bed, add kindling and follow previous steps.

Fuel overloading

The maximum amount of fuel specified in this manual should not be exceeded, overloading can cause excess smoke.

De-ashing

De-ashing is only required periodically as wood burns better on a bed of ash. However there are some air vents situated within the fuel retainer. Regularly check that ash does not cover these vents.

Safety

When the stove is in use, always use the glove provided to open the door and the glove or tool to operate the air control knob. Your stove has not been designed to run with the door open, it should therefore be kept shut except when refuelling is carried out.

Air controls

To avoid the risk of excess smoke emission this stove must not be operated with the door open and the air controls should always be used as directed in the instructions.

WARNING - LOADING FUEL WITHOUT OPENING CONTROLS CAN LEAD TO A SUDDEN IGNITION AND POTENTIAL DAMAGE TO YOUR STOVE AND FLUE SYSTEM.

4.f Principles of Combustion

All fuels need the presence of oxygen to burn. The more oxygen a fire gets the hotter and faster it will burn. When, where and how air is introduced into a firebox of a stove will greatly influence the heat output, burning rate, fuel efficiency and impact on the environment.

WOOD AS FUEL

Wood is an entirely renewable resource but needs to be sourced, stored and used carefully. Wood needs to be seasoned (cut and stored for at least one year after cutting) or kiln dried prior to burning in the stove with a moisture content of less that 20%. As a fuel it gives a good flame and a reasonably high heat output, the burn rate is high but will vary considerably depending on size and species. Wood requires combustion air to be directed down onto it to burn most efficiently.

Damp, impregnated or painted wood will tar up your flue. Damp wood will also give reduced heat to room and cause more emissions.

TIPS FOR IDENTIFYING DRY WOOD

1) Visible cracks at the end of the log
2) Bang two logs together, they will sound hollow
3) Wood moisture content measuring devices are available

TIPS FOR BURNING WELL

It is important to burn wood in complete loads, this will ensure all the wood in the load is at the same stage of combustion as much as possible. By doing this the firebox temperature will stay in the gas burning stage for longer, making the stove more efficient and cleaner burning.

We do not advise you to try and keep a wood fire in overnight. When the air control is put on a low setting, logs can smoulder and burn inefficiently, releasing harmful emissions into the atmosphere.

If you are looking for a local wood supplier ***www.woodsure.co.uk*** has a list of certified fuel suppliers.

There are 3 stages in the burning of wood

Stage 1

Drying out. When a piece of wood enters the firebox it will stay below the boiling point of water (100°C) until all the moisture has been driven out. Between 150 – 200°C wood begins to give off volatile gases, some of these will burn while others will mix with the carbon dioxide and water vapour and be carried out the chimney as smoke.

Stage 2

In the second stage of combustion temperatures must reach 600°C for the gases to start burning off. This will only occur with the right amount of air and heat leading to higher efficiencies. These gases burn as a yellow flame above the wood.

Stage 3

Charcoal is left once all the gases have been burnt off. The charcoal contains at least half of the wood's heat potential, at this stage the fire will burn more slowly and without flame requiring less air.

Plant a tree... just for me

4.g Cooking on a Penguin

ALL MODELS: The top surface of all of our stoves (the top plate) is hot and can be used to boil a kettle or warm up a small saucepan. You will require flat bottomed kettle or pans. If you plan to use it regularly you will want items with a heavy bottom. If you plan to use the top plate regularly you may want to consider a rear flue to increase the available surface area. However even when top flued you can fit on a kettle and saucepan.

COOKER MODELS: All of our cooker models have an oven box above the stove. Do not place cookware directly on to the oven bottom. If cookware is placed on the oven bottom the lower layer of food will burn. There is a small rectangular cut out at the rear of the oven box, this is a vent for cooking smells.

The oven temperatures are completely dependent on the fire below, the fuel used and how it is maintained. Cooking over fire is one of the oldest methods of cooking but one of the least familiar to most people. When you begin using it, it will involve trial and error. Once the fire has been established for 20-30 minutes you can achieve temperatures between 140-240°C. 140-180°C is the average for a nicely established, medium fire, with fuel glowing. Always begin with a familiar well-tried recipe and compare the results with what you would normally expect from your usual cooker, then adjust accordingly. There are some tips and recipes on our website if you want some inspiration.
www.chillipenguin.co.uk/recipe-page

You can purchase an oven thermometer to monitor the oven temperature. You can also purchase a stove pipe thermometer. Be aware that a stove pipe thermometer will not give you the oven box temperature but the flue temp. However, what it will do is indicate how steady the temperature is and any rises and fall in it. The fire should always be well established before you begin so you can be more sure of getting a steady temperature. The usual precautions apply as with all applying heat to any food item. Ensure that food is throughly and safely cooked. Always check the centre of the food, use visual checks. Use a meat thermometer if you are unsure. If in doubt do not consume.

CARE OF THE OVEN BOX: The oven box is a steel chamber with an oven door. It may arrive with a thin spray coat of paint over the internal surface. This is just to preserve the steel surface in storage and transit. The heat of the fire will burn off waste food that falls onto the oven box interior, any deposits can be scraped off. Check periodically that the vent is clear and that the rope seals are sound.

COOKWARE: We have some cookware available designed for our oven dimensions. Ask your local stockist or see our online shop ***www.chillipenguin.co.uk/spares-shop***. Alteratively any cookware designed for a normal domestic oven is usually suitable for our ovens if you can source a suitable size.

Bake someone happy

Section **5**

Maintenance

Page 44-52

5. Maintenance

5.a Routine Checks and Cleaning

AS REQUIRED

Stove surface should be cleaned with a soft brush or lint free cloth when cold, some people use a vacuum cleaner attachment.

Ash removal - wood burns better on a bed of ash, and the ash will protect your firebricks. We leave 1-2cm of ash on the firebed. Check that ash is not covering the air vents within the front fuel retainer.

Glass cleaning - a damp cloth is all that is needed. Do not use abrasive pads or cleaners. We wipe ours daily because we love a perfect view of the fire! There are different types of stove glass on the market which require a more abrasive clean. Our glass does not. For any stuborn areas see our website for further info.

QUARTERLY

Throat plate brick - must be removed 6 monthly for cleaning, more regularly if used a lot, ensure it is refitted correctly – failure to do this could result in a partial blockage of the flue.

Door should be checked for positive closure against the seals.

Seals - check to make sure the seals are secure, free from damage and not brittle. Your local stove shop should be able to supply replacement rope seal and glue, alternatively they can be ordered through our online spares shop. The rope seals required by the stoves in this manual are 14mm. This is the same for the oven doors.

ANNUALLY

With a lined chimney all our stoves can be swept through the fire box but the correct flue brushes and rods must be used **(see Chimney and Access for Sweeping, section 3)**. We recommend using an experienced and qualified sweep. Extra flexible rods with the appropriate size brushes only should be used with flexible stainless steel liners. The use of incorrect rods can damage your flue.

If the stove is left for long periods without use, i.e. over the summer, it is advisable to clean the stove thoroughly and leave all the vents open. This will help prevent any build-up of condensation, allow the stove to keep dry and limit internal corrosion. The whole system should be checked after any prolonged period of inactivity to ensure that it is free from blockage.

Note: The appliance should be regularly maintained by a competent engineer.

For more info and advice visit:
www.chillipenguin.co.uk/FAQ/looking-after-your-penguin

5.b Painting your Stove or Stove Pipe

If you are painting your vitreous flue to match the stove colour or touching up an area of your stove there are 3 steps (do not use an aerosol spray when the stove is lit).

1. **Preparing the surface**
2. **Applying the paint**
3. **Curing or setting the paint**

The most critical step is surface preparation. The paint will adhere to the surface coat, if there is rust, it will fail. If the stove/flue has a coating that is peeling, blistering or chalking in any way, the topcoat will release in the same way. If there is oil/grease/ contaminant the paint will not adhere.

1. Preparing the surface

- Remove all rust by sandblasting, sanding or grinding. IF YOU APPLY ON TOP OF RUST the paint will adhere to the rust and fail . A new stove /flue should arrive rust free, this will only be relevant if you are renovating an old stove
- Remove oil, grease, contaminants. New flue can arrive with a chemical on the surface used during the manufacturing process. We recommend the use of an acetone based paint thinner and that you key the surface with fine sandpaper. This preparation is vital

Trouble shooting

Paint coming off in patches indicates a problem with surface preparation. The remedy is to remove the paint, prepare the surface and start again.

2. Applying the paint (vapour and propellant are flammable, avoid all naked flames and sparks)

- Best results are achieved when the paint, the stove/flue surface and the air temp. are between 18°C/66°F - 29°C/85°F. You can warm a cold can of paint by running a hot tap over it for 2 minutes. DO NOT expose to flames
- Shake the paint for 2 minutes to thoroughly mix the pigments, metallics and solvents
- Do a test spray onto a piece of cardboard, the first spray can be mostly propellant with no pigment
- Apply the first of 2-3 light coats. The first coat should be a mist coat (it will look like dots on the surface). Apply from 12-15 inches, if you are too close the paint will drip/run, if you are too far away you will get a gritty finish

- You can apply the second coat after 15 minutes. The paint will be touch dry in about 20 minutes. We recommend leaving it 4 hours before lighting the first fire

- If you are touching up a stove be aware that there are minute variations from batch to batch of paint so you may need to paint a whole surface to avoid these variations showing. eg if you are covering a mark on the top you may want to apply a coat to the whole top plate. YOU WILL BE COMPARING CURED PAINT WITH UNCURED PAINT SO THE DIFFERENCE WILL BE MORE APPARENT UNTIL THE NEW PAINT HAS CURED

Trouble shooting

If paint peels/looks like shattered glass/comes off in thin strips, too much paint was applied. If the surface is gritty the spray was applied too far fom the surface. The remedy is to remove as much paint as possible, prepare the surface and repaint.

3. To set or "cure" your paint

- Wait 4 hours after paint is applied (this does not apply if unpacking a new stove, this time is allowed in the workshop). Then we recommend the Goldilocks and the 3 bears method; small fire, medium fire, big fire

- Light a small kindling fire, keep burning for 10-15 minutes

- Add fuel gradually to build a medium fire. Building a hot fire immediately will "shock" the paint and cause it to release from the surface. Keep it burning like this for about 60 minutes (bringing the stove surface temperature to 450°F/230°C)

- For the final stage of curing, add fuel to make a very hot fire. Keep it at this level for about 60 minutes (achieving temperatures above 600°F/315°C)

Warning

Don't touch the surface with anything during the curing process. There is likely to be a strong smell when the paint is curing, ventilate the room well, open windows/doors as necessary. Take extra care if anyone else in the household has breathing difficulties. There will be a very slight colour change as the paint cures, the hottest areas will cure the soonest. This is completely normal. (It can be more obvious in the lighter colours)

5.c Keeping your Stove Glass Clear

To maintain clear glass there are 2 factors.

1. **Correct and dry fuel (see Principles of combustion, section 4)**
2. **Correct use of air control (see Making a fire - wood, section 4)**

As a general rule the hotter the fire the clearer the glass will be. If you have wet fuel the fire will struggle to reach high temperatures, an inefficient burn = blackening. If not enough air is being drawn through the firebox, due to incorrect use of the control, the fire will slumber and not burn as well or efficiently, also leading to blackening.

However there are also times within both the burn cycle and areas within the physical firebox where the temperatures are cooler. As far as the burn cycle you can just wait for a hotter fire and any discolouration will burn off. Cooler spots in the fire box such as in front of the fuel retaining bar and the corners of the glass can show signs of discolouration or a pattern of white dust. The ceramic glass we have used since Aug 2016 is polished, with a silica coating. When the stove is cool the glass should be cleaned with a soft cloth and water. Do not use abrasive pads or cleaners. Some stove glass requires this, ours does not. Further info and advice available online.

5.d Door Seal

If the door seal shows signs of deterioration, you may need to replace it. A 14mm diameter rope is required for the fire and oven door To test the effectiveness of the seal, when the stove is cold, trap a piece of paper between the door seal and stove body shutting the door completely, you should feel resistance when you try to pull the paper out. Repeat this for each edge.

5.e Door Glass Replacement

FIRE DOOR

Remove the 2 stainless steel retainers holding the glass panel by undoing the screws. Position replacement glass, tighten just enough to pinch the glass. Overtightening can result in the glass cracking.

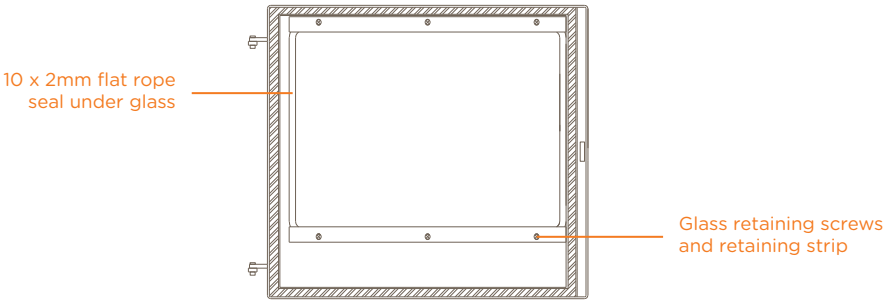

5.f Removing the Throat Brick on the Stock Cube Series & Penguin 7 Series

To sweep the chimney, and to remove soot from flue passageways within the stove you will need to remove the throat plate bricks. Diagram illustrating the location of the throat brick.

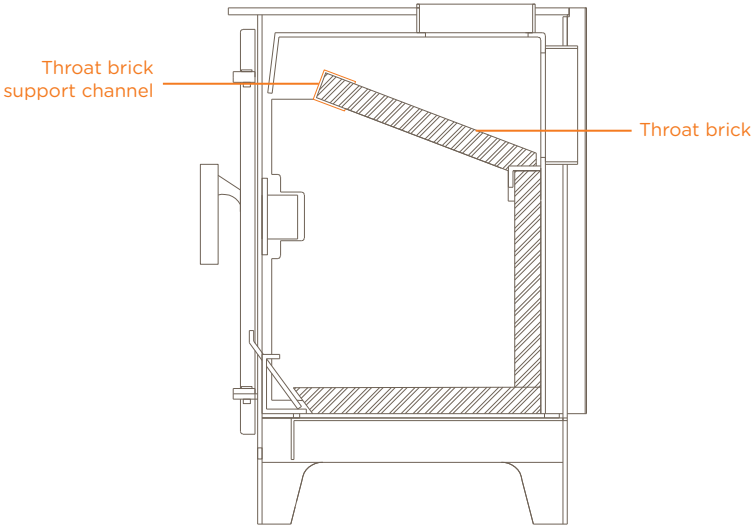

LOCATING THE THROAT BRICK

STEP 1

When the stove is cold, identify the throat brick and stainless steel brick support channel towards the front of the stove.

STEP 2

Gently pull the support channel toward you and away from the throat brick. Lift the brick up slightly so this channel can be removed.

STEP 3

Lift the brick up and tilt to one side, the brick should now easily be dropped down and removed.

STEP 4

For cleaning, brush off soot from brick.

STEP 5

For replacement, reverse above instructions. Ensure brick is central and has a good fit against the side brick and rear channel.

5.g Removing the Throat Brick on the Popty Ciwb/Cube & the Seventy Ate "78" Series

To sweep the chimney, and to remove soot from flue passageways within the stove you will need to remove the throat plate brick and the baffle brick. Diagram illustrating the location of the throat and baffle bricks.

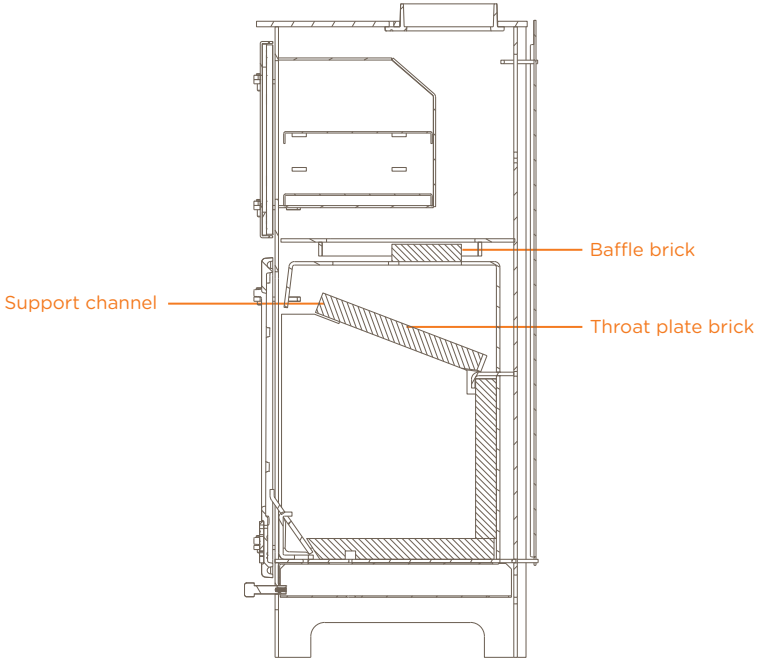

LOCATING THE THROAT BRICK

STEP 1

Clean out the fire box of the stove, then remove one of the bottom bricks followed by the back brick (which will drop down once the bottom brick is removed).

STEP 2

You will now be able to remove the side brick which will allow the throat brick and support channel to be removed.

STEP 3

You now have access to the baffle brick which can now be manoeuvred forward and slide out sideways and down.

STEP 4

The chimney and passage way can now be cleaned.

STEP 5

Re assembly is the same process in reverse.

5.h Vermiculite Bricks

The vermiculite bricks which line the fire chamber will need replacing over time, they are a perishable item. They are a pressed board, not a ceramic brick so they should be treated with care. They insulate the stove allowing it to burn more efficiently and protect the steel body from the heat of the stove. The amount of time they will last depends on stove usage, the fuel you burn and the care you take re-fuelling.

Fire brick signs of damage	
Cracks	Hairline cracks are caused by impact or vibration, usually a log thrown in a little roughly or a log that is slightly too large being pressed againt the bricks when the door closes. Replace if steel body of the stove is exposed or if the crack causes part of the brick to fall into the fire. A hairline crack in a brick will not damage the stove body.
Crumbling edges and corners	Expected wear and tear, replace if steel of stove body is exposed.

Caring for your vermiculite bricks
Do not use over sized logs
Do not over fill the fire chamber
Place logs in rather than throwing or dropping
If using a poker or tool inside the fire box try not to disturb the bricks
Do not use water or water based cleaning agents to clean the interior of the stove, vermiculite will weaken if it absorbs water
Only burn seasoned wood, due to moisture content, see point above

If the bricks require replacement you may need to remove some of the rear bricks in order to remove the throat plate. Take a note of their position and orientation. It is very common when replacing one fire brick to damage another. For this reason we recommend that if very small areas of damage/hairline crack are visible and the steel is not exposed, wait until you are ready to replace the whole set.

Bricks are available through your local Chilli stockist or our online shop. There are diagrams online to help you identify the correct bricks.
See *www.youtube.com/@chilli_penguin* for more guidance on replacing bricks and grates.

5.i Trouble Shooting

PROBLEM ☐ POSSIBLE CAUSE ■ REMEDIAL ACTION ☐

CANNOT GET FUEL TO STAY ALIGHT	
1. Fuel is damp	1. **Ensure fuel is dry**
2. Fire has been smothered	2. **Load smaller amounts of fuel at a time – be patient!**
3. Insufficient air	3. **Air boost has been closed before the fire has been established (see Making a Fire, section 4)**

SMOKE ENTERS ROOM	
1. Blocked flue way	1. **Let the fire go out then drop the throat plate brick down and check for blockages. Sweep chimney**
2. Damaged chimney	2. **Get chimney inspected**
3. Site and location of chimney	3. **If flue is clear and stove installed correctly and problem persists – seek professional advice**

GLASS BLACKENS *(SMALL LOCALISED AREAS WHERE WOOD HAD FALLEN AGAINST THE GLASS IS NORMAL, THIS WILL BURN OFF AS THE FIRE GETS HOTTER)*	
Air controls closed down too soon before fire established	**Leave air control open longer** **Some discolouration of the glass is normal after several fires, in the cooler areas of the glass door: near the fuel retainer and the corners. This will burn off in a hot fire or can be removed when stove is cold with a damp cloth (see Keeping Stove Glass Clear, section 5)**

CHIMNEY FIRE

By following the instructions in this manual, including regular cleaning of the stove and flue system you should avoid the possibility of a chimney fire. In the unlikely event that one occurs, raise the alarm to let others in the house know, call the Fire Service, if time and safety allows close the stove air controls, and exit the building.

Spares are available through your local Chilli stockist or our online shop. There are diagrams online to help you identify the correct parts and advice about how to fit: www.chillipenguin.co.uk/FAQ/looking-after-your-penguin

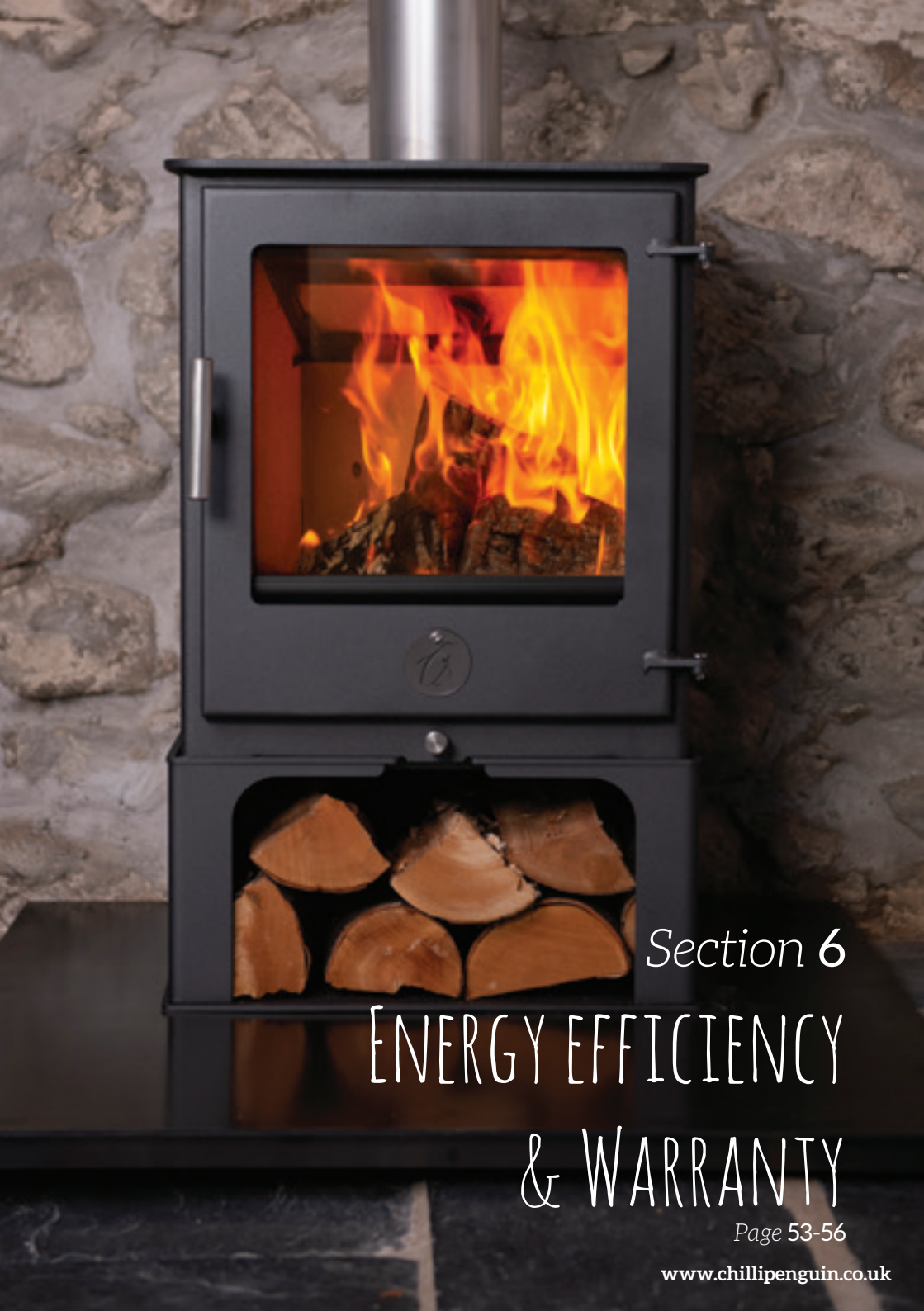

Section **6**

Energy efficiency & Warranty

Page **53-56**

6. Energy Efficiency & Warranty

6.a Energy Efficiency Labels

The Stock Cube Series

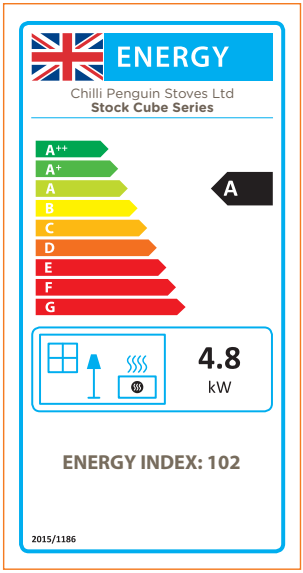

The Popty Ciwb/Cube Series

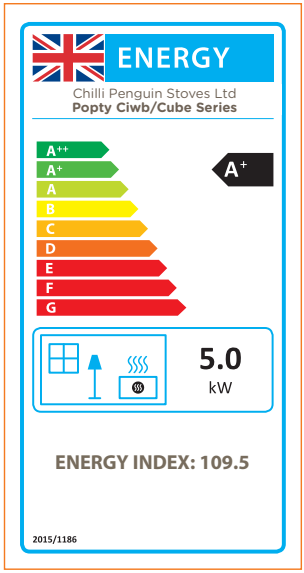

Penguin 7 Series

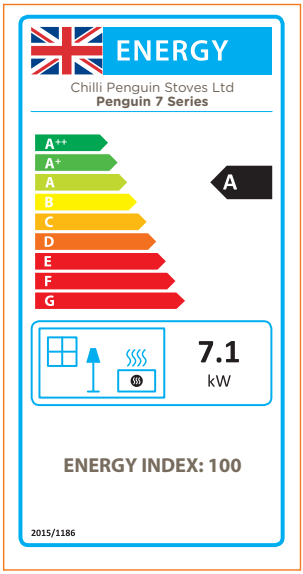

The Seventy Ate "78" Series

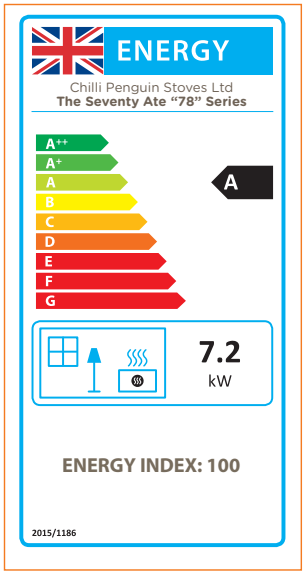

6.b Warranty

7 Year Warranty (available on registration)

A free 7 year extended warranty is offered if your stove is purchased through your local approved Chilli Penguin stockist and the warranty is registered online within two months.
Go to chillipenguin.co.uk, you will see warranty in the menu.

When you register your warranty, you will get a Penguin Owners account. This will record your stove model for future spares orders and you will receive a few stove care emails to help your penguin settle into its new home.

A Chilli Penguin Stove warranty covers the materials listed plus the construction and workmanship. The assembly, installation and operation of the stove, because they do not come under our direct control, are not included in this warranty. You are advised to take these matters up with your stove supplier or accredited installation engineer. The painted surface of the stove does not come under the warranty.

In the unlikely event of the failure of components covered by this warranty, CPS will repair or replace them to their original specification. Labour and shipping costs will be discretionary. It is important to use only replacement parts recommended by CPS.

Should any components arrive in a damaged state upon delivery, they will be replaced provided a written claim is made within 5 days.

Items covered
The steel body, door, handles and control.

Items NOT covered
Those items that are considered service items, these include; vermiculite bricks, door seals, door glass, gloves and painted surface. The whole of the warranty is invalid if there is any unauthorised modification of the appliance or if any part of the stove assembly, installation, operation and maintenance does not comply with the instructions supplied and with all Building Regulations in force at the time of purchase. In addition they must be certified by either a Hetas installer or your local building control dept.

6.c Disposal / Recycling

To dispose of the stove after the product life has expired, please observe the following information:

- Dispose of the items correctly, i.e. separate the parts to be disposed of in material groups
- Always dispose of items in a way that is as sustainable as possible and that is in line with the current environmental protection, reprocessing/ recycling and disposal technology

6.d Commissioning, Stove and Installation Details

Commissioning checklist		(Initials)
01	Have all parts been fitted in accordance with the instructions?	
02	Has fire cement and mortar dried out before lighting the stove?	
03	Once under fire have all seals been checked for soundness?	
04	Is the flue functioning correctly so that all combustion products are vented safely to the atmosphere via the chimney terminal?	
05	Have operating instructions and gloves been left with the customer?	
06	Has the customer been advised about the correct use of the stove ?	
07	Has the customer been warned to only use wood for this stove?	

Stove and installation details				
Shop Name			Purchase Date	
Installers Name			Installation Date	
Installers HETAS No.			Or Building Control Ref.	
Direct Air Kit Fitted	Yes	No	Is Direct Air Commissioning Test Completed	
Sign				
SERIAL NO. (Needed in order to register your stove online)				

ENGINEERING ON FIRE

CHILLI PENGUIN

STOVES

Have you registered your free 7 year warranty yet?

scan here

Sales and Technical Support
Call: 01758 721 247

stoves@chillipenguin.co.uk

Local Stockists
www.chillipenguin/contact

Chilli Penguin Workshop
11 Glan y Don Industrial Estate | Pwllheli | Gwynedd LL53 5YT.

Follow Us:

www.chillipenguin.co.uk

PLANET LOVING PENGUIN...

KEEP THE SEA PLASTIC FREE

PRINTED VERSION USES FSC PAPER AND VEGAN FRIENDLY INKS